Donut & Funnel Cake Fryers

Instruction Manual



ITEM	MODEL	GAS
49101 49102	CE-CN-0125 CE-CN-0170	Natural Gas 90,000 / 120,000 BTU

Revised - 11/17/2026 · 49101-49102-EN Rev. B

STOP
DO NOT RETURN THIS PRODUCT TO THE STORE
For questions or assistance with this product call OMCAN Toll Free: 1 800 465 0234 Customer Service or visit the Support section of www.omcan.com

Item 49101 product page

Item 49102 product page

cETLus

ETL Sanitation

Made in China

Table of Contents

Models CE-CN-0125 / CE-CN-0170

Section	Page
General Information	3 - 4
Safety and Warranty	5 - 6
Technical Specifications	7
Installation	8 - 10
Operation	11 - 12
Maintenance	13 - 15
Troubleshooting	16
Parts Breakdown	17 - 19
Notes	20 - 22
Warranty Registration	23

General Information

Record your product information here. Omcan tracks the service history of your equipment by its serial number — have it ready when you call.

Model Number	CE-CN-0125 / CE-CN-0170 (circle one)
Serial Number	
Item Number	49101 / 49102
Date of Purchase	
Dealer	
Installed By	

Omcan Manufacturing and Distributing Company Inc., Food Machinery of America, Inc. dba Omcan and Omcan Inc. are not responsible for any harm or injury caused due to any person's improper or negligent use of this equipment. The product shall only be operated by someone over the age of 18, of sound mind, and not under the influence of any drugs or alcohol, who has been trained in the correct operation of this machine, and is wearing authorized, proper safety clothing. Any modification to the machine voids any warranty, and may cause harm to individuals using the machine or in the vicinity of the machine while in operation.

CHECK PACKAGE UPON ARRIVAL

Upon receipt of an Omcan shipment please inspect for external damage. If no damage is evident on the external packaging, open carton to ensure all ordered items are within the box, and there is no concealed damage to the machine. If the package has suffered rough handling, bumps or damage (visible or concealed), please note it on the bill of lading before accepting the delivery and contact Omcan within 24 hours, so we may initiate a claim with the carrier. A detailed report on the extent of the damage caused to the machine must be filled out within three days, from the delivery date shown in the shipping documents. Omcan has no recourse for damaged products that were shipped collect or third party.

Before operating any equipment, always read and familiarize yourself with all operation and safety instructions.

Omcan would like to thank you for purchasing this machine. It's of the utmost importance to save these instructions for future reference. Also save the original box and packaging for shipping the equipment if servicing or returning of the machine is required.

Omcan Fabrication et distribution Compagnie Limitée et Food Machinery d'Amérique, dba Omcan et Omcan Inc. ne sont pas responsables de tout dommage ou blessure causé du fait que toute personne ait utilisé cet équipement de façon irrégulière. Le produit ne doit être exploité que par quelqu'un de plus de 18 ans, sain d'esprit, et pas sous l'influence d'une drogue ou d'alcool, qui a été formé pour utiliser cette machine correctement, et est vêtu de vêtements de sécurité appropriés. Toute modification de la machine annule toute garantie, et peut causer un préjudice à des personnes utilisant la machine ou des personnes à proximité de la machine pendant son fonctionnement.

General Information

VÉRIFIEZ LE COLIS DÈS RÉCEPTION

Dès réception d'une expédition d'Omcan veuillez inspecter pour dommages externes. Si aucun dommage n'est visible sur l'emballage externe, ouvrez le carton afin de vous assurer que tous les éléments commandés sont dans la boîte, et qu'il n'y a aucun dommage dissimulé à la machine. Si le colis a subi de mauvaises manipulations, des bosses ou des dommages (visibles ou cachés), notez-le sur le bon de livraison avant d'accepter la livraison et contactez Omcan dans les 24 heures qui suivent, pour que nous puissions engager une réclamation auprès du transporteur. Un rapport détaillé sur l'étendue des dommages causés à la machine doit être rempli dans un délai de trois jours, à compter de la date de livraison indiquée dans les documents d'expédition. Omcan n'a aucun droit de recours pour les produits endommagés qui ont été expédiés en port dû ou par un tiers transporteur.

Avant d'utiliser n'importe quel équipement, toujours lire et vous familiariser avec toutes les opérations et les consignes de sécurité.

Omcan voudrait vous remercier d'avoir choisi cette machine. Il est primordial de conserver ces instructions pour une référence ultérieure. Conservez également la boîte originale et l'emballage pour l'expédition de l'équipement si l'entretien ou le retour de la machine est nécessaire.

Omcan Empresa de Fabricación y Distribución Inc. y Maquinaria de Alimentos de América, Inc. dba Omcan y Omcan Inc. no son responsables de ningún daño o perjuicio causado por el uso inadecuado o descuidado de este equipo por cualquier persona. El producto solo podrá ser operado por una persona mayor de 18 años, en su sano juicio y no bajo la influencia de alguna droga o alcohol, que haya sido entrenada en el correcto funcionamiento de esta máquina, y que esté usando ropa de seguridad apropiada y autorizada. Cualquier modificación a la máquina anula la garantía y puede causar daños a las personas que usan la máquina o que se encuentran cerca de ella mientras está en funcionamiento.

REVISE EL PAQUETE A SU LLEGADA

Tras la recepción de un envío Omcan favor inspeccionar daños externos. Si no hay daños evidentes en el empaque exterior, abra el cartón para asegurarse que todos los artículos solicitados estén dentro de la caja y no encuentre daños ocultos en la máquina. Si el paquete ha sufrido un manejo de poco cuidado, golpes o daños (visibles u ocultos) por favor anote en la factura antes de aceptar la entrega y contacte Omcan dentro de las 24 horas, de modo que podamos iniciar una reclamación con la compañía. Un informe detallado sobre los daños causados a la máquina debe ser llenado en el plazo de tres días, desde la fecha de entrega que se muestra en los documentos de envío. Omcan no tiene ningún recurso por productos dañados que se enviaron a cobro revertido o por terceros.

Antes de utilizar cualquier equipo, siempre lea y familiarícese con todas las instrucciones de funcionamiento y seguridad.

A Omcan le gustaría darle las gracias por la compra de esta máquina. Es de la mayor importancia guardar estas instrucciones para futuras consultas. Además, guarde la caja original y el embalaje para el envío del equipo si se requiere servicio técnico o la devolución de la máquina.

Safety and Warranty

This manual uses the following signal words:

Warning: a hazard that could result in death or serious injury.

Caution: a hazard that could result in minor or moderate injury.

Note: information important to the correct use or care of the unit.

GAS SAFETY

THIS MANUAL HAS BEEN PREPARED FOR PERSONNEL QUALIFIED TO INSTALL GAS EQUIPMENT, WHO SHOULD PERFORM THE INITIAL FIELD START-UP AND ADJUSTMENTS OF THE EQUIPMENT COVERED BY THIS MANUAL.

POST IN A PROMINENT LOCATION THE INSTRUCTIONS TO BE FOLLOWED IN THE EVENT THE SMELL OF GAS IS DETECTED. This information can be obtained from the local gas supplier.

IMPORTANT: in the event a gas odour is detected, shut down the units at the main shutoff valve and contact the local gas company or gas supplier for service.

FOR YOUR SAFETY: DO NOT store or use gasoline or other flammable vapours or liquids in the vicinity of this or any other appliance.

Warning: improper installation, adjustment, alteration, service or maintenance can cause property damage, injury or death. Read the installation, operating and maintenance instructions thoroughly before installing or servicing this equipment.

CODES AND STANDARDS

The fryer must be installed in accordance with:

In the United States

- State and local codes, or in the absence of local codes, with:
- National Fuel Gas Code, ANSI Z223.1/NFPA 54 (latest edition). Copies may be obtained from The American Gas Association Accredited Standards Committee Z223, 400 N. Capitol St. NW, Washington, DC 20001, or the Secretary Standards Council, NFPA, 1 Batterymarch Park, Quincy, MA 02169-7471.
- NFPA Standard 96, Vapor Removal from Cooking Equipment (latest edition), available from the National Fire Protection Association, Batterymarch Park, Quincy, MA.
- National Electrical Code, ANSI/NFPA 70 (latest edition), available from the National Fire Protection Association, Batterymarch Park, Quincy, MA 02169-7471.
- In the Commonwealth of Massachusetts, all gas appliances vented through a ventilation hood or exhaust system with a damper or with a power means of exhaust shall comply with 248 CMR.

In Canada

- Local codes.
- CAN/CSA-B149.1 Natural Gas and Propane Installation Code (latest edition), available from the Canadian Standards Association, 155 Queen Street, Suite 1300, Ottawa, Ontario, Canada K1P 6L1.
- CSA C22.1 Canadian Electrical Code (latest edition), available from the Canadian Standards Association, 155 Queen Street, Suite 1300, Ottawa, Ontario, Canada K1P 6L1.

Safety and Warranty

Note: manifold pressures must be checked on installation and must match the rating plate on the unit.

Note: all fryers are sprayed with anti-rust oil before shipment to prevent rusting during storage and transportation. A small amount of oil may collect at the bottom of the tank.

RESIDENTIAL USERS: vendor assumes no liability for parts or labor coverage for component failure or other damages resulting from installation in non-commercial or residential applications. The right is reserved to deny shipment for residential usage; if this occurs, you will be notified as soon as possible.

---

1 YEAR PARTS AND LABOUR BENCH WARRANTY

Within the warranty period, contact Omcan Inc. at 1-800-465-0234 to schedule a drop off to either an Omcan authorized service depot in the area, or to an Omcan Service warehouse to repair the equipment.

Unauthorized maintenance will void the warranty. Warranty covers electrical and part failures, not improper use.

Please see https://omcan.com/disclaimer for complete info.

WARNING:

The packaging components are classified as normal solid urban waste and can therefore be disposed of without difficulty.

In any case, for suitable recycling, we suggest disposing of the products separately (differentiated waste) according to the current norms.

DO NOT DISCARD ANY PACKAGING MATERIALS IN THE ENVIRONMENT!

Technical Specifications

Model	CE-CN-0125	CE-CN-0170
Item Number	49101	49102
Gas Type	Natural Gas	Natural Gas
Gas Convertible	Yes, with conversion kit AS859 (not included)	Yes, with conversion kit AS860 (not included)
Oil Capacity	125 lb (56.7 kg)	170 lb (77.1 kg)
Fry Pot Dimensions (W x D)	18.1" x 24" (460 x 610 mm)	24" x 24" (610 x 610 mm)
Cooking Area Depth	4.6" (116 mm)	4.6" (116 mm)
Max. Oil Level	4.3" (110 mm)	4.3" (110 mm)
Number of Fry Pots	1	1
Number of Fry Baskets	1	1
Split Pot	No	No
Burner Style	Tube Burner	Tube Burner
Number of Tubes	3	4
Burner BTU	30,000	30,000
Total BTU	90,000	120,000
Temperature Range	200–400 °F (93.3–204.4 °C)	200–400 °F (93.3–204.4 °C)
Max. Temperature Limit	450 °F (232.2 °C)	450 °F (232.2 °C)
Intuitive Millivolt Control	Yes	Yes
Standby Pilot	Yes	Yes
Gas Inlet Size	1/2" (13 mm)	1/2" (13 mm)
Exterior Material	Stainless Steel Front / Galvanized Sides	Stainless Steel Front / Galvanized Sides
Interior Material	Stainless Steel Pot / Galvanized Sides	Stainless Steel Pot / Galvanized Sides
Exterior Dimensions (W x D x H)	45" x 41.3" x 58.1" (1143 x 1050 x 1477 mm)	56.8" x 41.3" x 58.1" (1443 x 1050 x 1477 mm)
Net Weight	244 lb (110.7 kg)	264 lb (119.7 kg)

Cooking area depth is measured from the top of the tank to the bottom of the frying area.

Installation

BEFORE YOU BEGIN

☐ The gas type (natural or propane) matches the data plate on the inside of the door panel, and the fryer is configured for the installation elevation.

☐ A gas shutoff valve is installed in the gas line ahead of the fryer.

☐ The gas supply line is at least 1/2" (12.7 mm) iron pipe, or 3/4" (19 mm) if the optional quick-disconnect flex hose is used.

☐ Incoming gas pressure is 1/2 PSI (3.45 kPa) or less, or an additional pressure regulator is installed.

☐ The location gives the clearances listed below and sits under a hood that extends 6" (15 cm) beyond the fryer on both sides.

☐ A restraint device is available to keep the fryer from tipping and to protect the gas connection from strain.

UNPACKING

This fryer was carefully inspected before leaving the factory. Upon acceptance of the shipment, the transportation company assumes full responsibility for safe delivery.

Immediately after unpacking the fryer, check for possible shipping damage. If the fryer is damaged, save the packaging material and contact the carrier immediately.

INSTALLATION

DO NOT use the door or its handle to lift the fryer.

Before installing the fryer, verify that the type of gas (natural or propane) matches the specifications on the fryer data plate, which is located on the inside of the door panel. Make sure the fryer is configured for the proper elevation.

The fryer ships for natural gas. To convert it to propane, use the Omcan conversion kit for your model (not included): item AS859 for 49101 or item AS860 for 49102. Each kit includes the burner nozzles, pilot nozzle and combination valve.

CLEARANCES

Minimum clearance from combustible construction

- 6" (15 cm) from the sides of the fryer.
- 6" (15 cm) from the back of the fryer.
- The fryer may be installed on combustible floors.

Minimum clearance from noncombustible construction

- 0" from the sides of the fryer.
- 0" from the back of the fryer.
- 16" (41 cm) between the fryer and any open-top flame unit.
- Allow space for servicing and operation.

Installation

LOCATION

- Install the fryer in an area with sufficient air supply for gas combustion at the fryer burners.
- **DO NOT** obstruct the flow of combustion and ventilation air.
- Provide adequate clearance for air openings into the combustion chamber.
- **DO NOT** let fans blow directly onto the fryer.
- Avoid wall-type fans, which create cross-currents within a room. Avoid open windows next to the sides or back of the fryer.

RESTRAINT

The fryer must be restrained to prevent tipping and the splashing of hot liquid. The means of restraint may be the manner of installation, such as connection to a battery of appliances or installation in an alcove, or separate means such as adequate ties.

FLUE CONNECTION

- Comply with Vapor Removal from Cooking Equipment, NFPA Standard 96 (latest edition), available from the National Fire Protection Association, Batterymarch Park, Quincy, MA.
- Locate the fryer under a hood with an adequate connection to an exhaust duct. The hood must extend 6" (15 cm) beyond the fryer on both sides.
- Clearance above the fryer must be adequate for combustion byproducts to be removed efficiently.
- Maintain a minimum clearance of 18" (46 cm) between the flue vent and the filters of the hood venting system.
- **NEVER** make flue connections directly to the fryer.
- **DO NOT** obstruct the flow of gases from the appliance. Maintain proper air balance in the room.
- Make sure the ventilation system does not cause a down draft at the fryer's flue opening. A down draft stops the fryer from exhausting properly and causes overheating, which may cause permanent damage. Damage caused by down draft is not covered by the equipment warranty.
- **NEVER** allow anything to obstruct the flue or the ventilation leaving the fryer flue. **DO NOT** put anything on top of the flue area.

GAS CONNECTION

Warning: all gas supply connections and any pipe joint compound must be resistant to the action of propane gas.

The gas inlet is located on the lower rear of the fryer. Codes require a gas shutoff valve to be installed in the gas line ahead of the fryer.

The gas supply line must be at least the equivalent of 1/2" (12.7 mm) iron pipe. If the optional quick-disconnect flex hose is used, use 3/4" (19 mm) iron pipe.

Make sure the pipes are clean and free of obstructions, dirt and piping compound. A battery requires one or two connections of appropriate size for the gas requirement.

Warning: before lighting, check all joints in the gas supply line for leaks with a soap and water solution. **NEVER** use an open flame. After the piping has been checked for leaks, fully purge the gas pipes to remove air.

Installation

GAS PRESSURES (ALL MODELS)

Gas	Manifold Pressure
Natural gas	4" W.C. (0.8 kPa)
Propane	10" W.C. (2.75 kPa)

If incoming pressure exceeds 1/2 PSI (3.45 kPa), an additional pressure regulator must be installed.

TESTING THE GAS SUPPLY PIPING SYSTEM

When test pressures exceed 1/2 PSI (3.45 kPa), the fryer and its individual shutoff valve must be disconnected from the gas supply piping system. When test pressures are 1/2 PSI (3.45 kPa) or less, the fryer must be isolated from the gas supply piping system by closing its individual shutoff valve.

FRYERS WITH CASTERS

Separate instructions for installing casters are included with the casters.

- The installation must be made with a connector that complies with the Standard for Connectors for Movable Gas Appliances, ANSI Z21.69 / CAN/CGA-6.16, and a quick-disconnect device that complies with the Standard for Quick-Disconnect Devices for Use with Gas Fuel, ANSI Z21.41 / CSA 6.9.
- When installing a quick disconnect, also install a means of limiting the movement of the fryer. This device prevents the gas line or quick disconnect from being strained. Attach the restraining device to the cutout on the back panel.
- The fryer must be installed with a connector (not supplied) that complies with the above codes.
- The fryer must be installed with a restraining means to guard against transmission of strain to the connector.
- The fryer must be installed with the casters provided.
- If the restraint must be disconnected, turn the gas supply off first. Reconnect the restraint after the fryer has been returned to its originally installed position.

LEVELING THE FRYER

1. After the gas connections have been made, place a level on top of the fryer.
2. Make sure the fryer is level front-to-back and side-to-side in its final installed position.
3. Lock the wheels after the unit is level.

Operation

Warning: hot oil and parts can cause burns. Use care when operating, cleaning and servicing the fryer.

Warning: spilling hot frying compound can cause severe burns. **DO NOT** move the fryer without draining all frying compound from the tank.

Warning: DO NOT use the fryer during a power outage.

OVER-TEMPERATURE SHUTDOWN

If the shortening overheats, a high-temperature shutoff device turns the gas valve off and extinguishes the pilot.

If the fryer shuts down because of overheating, **DO NOT** relight the pilot until the shortening temperature is below 300 °F (149 °C).

If overheating persists, contact your local authorized service office.

BEFORE FIRST USE: CLEANING

New units are wiped down at the factory to remove any visible dirt, oil or grease left from the manufacturing process.

Before any food preparation, thoroughly wash the protective oil from all surface parts and the tank interior with hot soapy water to remove any film residue, dust or debris.

Note: DO NOT use chlorine or sulfate/sulfide cleaners.

- Wash any accessories shipped with the unit.
- Rinse the fryer and accessories thoroughly and drain the fryer.
- Wipe the tank completely dry with a soft, clean cloth.

FILLING THE TANK WITH SHORTENING

Note: NEVER use solid shortening in this fryer. Melting solid shortening damages the tank and voids the warranty.

1. Close the drain valve.
2. Fill the fryer tank with liquid shortening, to a level between the MIN and MAX lines in the tank.
3. Shortening expands when heated. **DO NOT** fill the tank above the MAX line.
4. Add fresh shortening as needed to maintain the oil level.

LIGHTING THE PILOT

1. Open the door.
2. Make sure the thermostat is set to OFF. The thermostat is located behind the door.
3. Push the gas control valve knob in and turn it to OFF. Wait 5 minutes for unburned gas to vent.
4. Push the gas control valve knob in and turn it to the "L" in PILOT.
5. While still holding the knob in, light the pilot with a lit flame. Keep the knob pressed in until the pilot stays lit when the knob is released. If the pilot does not stay lit, repeat steps 3 to 5.
6. Push the gas control knob in and turn it to ON.
7. If the gas supply is interrupted, repeat steps 2 to 6.

Operation

TURNING ON THE FRYER

- Set the temperature knob to the desired temperature.
- When the set temperature is reached, the thermostat shuts off the gas flow to the burners.
- The pilot remains lit. The burners cycle on and off to maintain the set temperature.

TURNING OFF THE FRYER

1. Turn the thermostat OFF.
2. To keep the pilot lit, turn the gas valve to the "L" in PILOT.
3. To shut off all gas to the system, including the pilot, turn the gas valve knob to OFF.

EXTENDED SHUTDOWN

1. Turn the thermostat knob to OFF.
2. Push in the pilot knob and turn it to OFF.
3. Thoroughly drain the fryer (see Maintenance, DRAINING THE OIL).
4. Clean the fryer (see Maintenance, CLEANING).
5. Turn off the main gas shutoff valve.

BASIC FRYING INSTRUCTIONS

- Set the desired temperature and allow the shortening to heat up to that temperature.
- Fry items of the same size together so they cook evenly.
- Drain or wipe dry raw or wet foods to minimize splatter when lowering them into hot shortening.
- Add fresh shortening as needed.

FRY BASKET GUIDELINES

- **DO NOT** overfill baskets. Lower the basket into the oil carefully.
- When frying doughnuts and fritters, turn the product only once during frying.
- When cooking French fries or onion rings, shake the basket several times.
- Drop batter-covered foods carefully, one by one, into the shortening or basket. If you use the basket, dip it into the shortening first to reduce batter build-up on the basket.
- When frying is complete, remove the basket or product. Hang the basket on the rear hanger.

EXTENDING SHORTENING LIFE

- **DO NOT** salt foods over the fryer.
- Use good-quality shortening.
- Filter the shortening daily (at a minimum).
- Replace the shortening if its flavour deteriorates.
- Keep the equipment and its surroundings clean.
- Set the thermostat correctly.
- Remove excess moisture and particles from food before placing it in the fryer.

Maintenance

Warning: hot oil and hot parts can cause burns. Use care when operating, cleaning and servicing the fryer.

Warning: spilling hot frying compound can cause severe burns. **DO NOT** move the fryer without draining all frying compound from the tank.

DRAINING THE OIL

1. Turn the thermostat knob to OFF.
2. Insert the drain extension into the drain valve. Tighten it hand tight only.
3. Direct the drain extension into the mobile filtering device you want to use.
4. Slowly open the drain valve to let oil flow from the fry tank into the filter pan, then open the drain valve all the way.
5. When the fry tank is empty, brush out any remaining debris.
6. Close the drain valve.
7. Fill the tank with new shortening, at least to the MIN level but no higher than halfway between MIN and MAX. Oil expands as it heats.
8. Turn the thermostat knob to the desired set temperature. The burners come on and heat the oil.

CLEANING

Part	What to Use	Never Use
Exterior surfaces (stainless steel)	Cleaning brush and a damp cloth with warm water and a mild soap or detergent; rinse, then polish with a soft dry cloth. For stubborn discolouration, a self-soaping, non-metallic scouring pad, rubbing with the grain.	Chlorine or sulfate/sulfide cleaners; metallic scouring pads; harsh cleaners.
Fry tank	Cleaning brush to remove scraps and sediment; low-foaming cleaner/degreaser for the boil-out, then 1 cup (1/4 L) of vinegar to neutralize.	Chlorine or sulfate/sulfide cleaners.
Accessories	Hot soapy water; rinse thoroughly.	

Daily

- Clean all exterior surfaces of the fryer at least once a day.
- Keep the exterior clean and free of accumulated grease. If regular cleaning is neglected, grease burns on and discolouration may form.
- Remove discolouration by washing with detergent or soap and water.
- Fingerprints show on polished stainless steel. A cleaner that leaves a thin oily or waxy film minimizes them.

BOIL-OUT PROCEDURE (WEEKLY OR AS REQUIRED)

1. Drain the tank (see DRAINING THE OIL).
2. Once the shortening has drained, flush out scraps and sediment with the cleaning brush.
3. Close the drain valve and fill the tank with water. Add a low-foaming cleaner/degreaser, following the instructions on the package. **DO NOT** use chlorine or sulfate/sulfide cleaners.

Maintenance

4. Keep the solution level between the MIN and MAX levels on the fryer tank.
5. Set the temperature knob to 200 °F (93 °C), or as recommended for the solution used. Let the solution simmer for about 15 to 20 minutes.
6. Drain the cleaning solution from the tank.
7. Close the drain valve and refill the tank with water. Add 1 cup (1/4 L) of vinegar to neutralize any alkaline residue left by the cleaner. Keep the level between MIN and MAX.
8. Bring the solution to a simmer only, then turn the thermostat off. Let it stand for a few minutes.
9. Drain the tank (see DRAINING THE OIL). Rinse thoroughly with clear, hot water until all traces of cleaner are removed. Dry the tank thoroughly.
10. Close the drain valve and add shortening (see Operation, FILLING THE TANK WITH SHORTENING). The fryer is now ready for use.

FLUE VENT INSPECTION

Once a year, when the fryer is cool, inspect the flue and clear any obstructions.

MAINTENANCE SCHEDULE

The tasks below are prescribed in this manual. Check off each task in the MAINTENANCE LOG as it is completed.

Task	Daily	Weekly	Annually
Filter the shortening	✓		
Clean all exterior surfaces	✓		
Boil out the fry tank (or as required)		✓	
Inspect the flue vent and clear obstructions			✓

Maintenance

MAINTENANCE LOG

Model: CE-CN-0125 / CE-CN-0170 **Serial Number:** _____

Date	Task Performed	By

Troubleshooting

Problem	Probable Cause
No heat.	Thermostat dial not turned on. Pilot not lit. Gas supply not turned on. Wire connections loose (call service). Wire connections need cleaning (call service). Faulty thermopile (call service).
Insufficient or too much heat.	Thermostat dial not set to the desired temperature. High limit tripped (call service). Faulty temperature probe (call service).
Tank will not drain.	Shortening too cold. Drain pipe clogged with debris.
If these checks do not resolve the issue, stop using the unit and contact Omcan Customer Service at 1-800-465-0234.	

Parts Breakdown

MODEL CE-CN-0125 · ITEM 49101
MODEL CE-CN-0170 · ITEM 49102

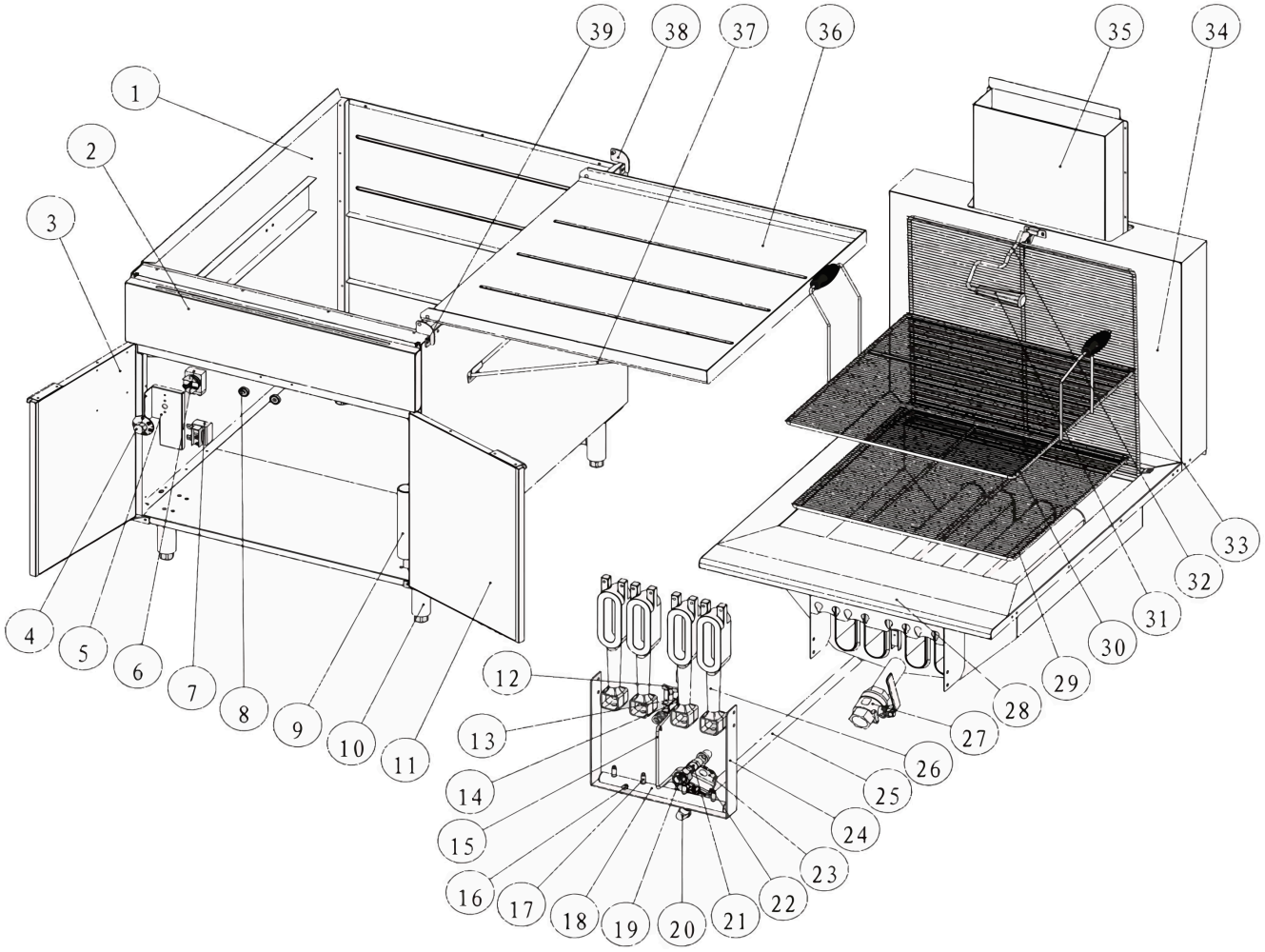

Both models share this exploded view. Position 37 (tank lid holding rack) is fitted to model CE-CN-0170 (item 49102) only. Part numbers for each model are listed on the following pages. When ordering parts, quote the Omcan part number, the model and the serial number of your fryer. Use only original replacement parts.

Parts Breakdown

MODEL CE-CN-0125 · ITEM 49101 · PARTS LIST

Pos.	Part	Omcan Part No.
1	Housing Assembly	AY243
2	Front Decoration Plate	AY244
3	Left Door Assembly	AY245
4	Knob	AN728
5	Thermostat Bracket	AY246
6	Thermostat	AN725
7	High Limit	AN729
8	Door Magnet	AD716
9	Extension Drain Pipe	AW355
10	Adjustable Leg	AD718
11	Right Door Assembly	AY247
12	Pilot (NG)	AN722
13	Thermopile	AN721
14	Pilot Connector	AY248
15	Pilot Corrugated Pipe	AW356
16	Test Plug	AJ605
17	Burner Nozzle Base	AW357
18	Gas Distribution Pipe	AY249
19	Union Connector	AN715
20	Elbow	AN718
21	1/2" Male Thread Connector	AP128
22	Burner Nozzle (NG)	66619
23	Valve	64530
24	Gas Distribution Pipe Mounting Bracket	AY250
25	Manifold	AY251
26	Burner	AW358
27	Drain Valve, 1-1/4"	AW359
28	Tank Assembly	AY252
29	Support Screen	AW360
30	Basket Screen with Handle	AW361
31	Press Screen Handle	AW362
32	Press Screen Handle Rod	AW363
33	Press Screen	AW364
34	Chimney Housing	AY253
35	Chimney	AY254
36	Tank Lid Assembly	AW365
37	Tank Lid Holding Rack	*Not used on this model*
38	Tank Lid Back Hinge	AY255
39	Tank Lid Front Hinge	AY256

Parts Breakdown

MODEL CE-CN-0170 · ITEM 49102 · PARTS LIST

Pos.	Part	Omcan Part No.
1	Housing Assembly	AY257
2	Front Decoration Plate	AY258
3	Left Door Assembly	AY259
4	Knob	AN728
5	Thermostat Bracket	AY260
6	Thermostat	AN725
7	High Limit	AN729
8	Door Magnet	AD716
9	Extension Drain Pipe	AW355
10	Adjustable Leg	AD718
11	Right Door Assembly	AY261
12	Pilot (NG)	AN722
13	Thermopile	AN721
14	Pilot Connector	AY262
15	Pilot Corrugated Pipe	AW356
16	Test Plug	AJ605
17	Burner Nozzle Base	AW357
18	Gas Distribution Pipe	AY263
19	Union Connector	AN715
20	Elbow	AN718
21	1/2" Male Thread Connector	AP128
22	Burner Nozzle (NG)	66619
23	Valve	64530
24	Gas Distribution Pipe Mounting Bracket	AY264
25	Manifold	AY265
26	Burner	AW358
27	Drain Valve, 1-1/4"	AW359
28	Tank Assembly	AY266
29	Support Screen	AW366
30	Basket Screen with Handle	AW367
31	Press Screen Handle	AW362
32	Press Screen Handle Rod	AW363
33	Press Screen	AW368
34	Chimney Housing	AY267
35	Chimney	AY268
36	Tank Lid Assembly	AW369
37	Tank Lid Holding Rack	AY269
38	Tank Lid Back Hinge	AY255
39	Tank Lid Front Hinge	AY256

Notes

Notes

Notes

Warranty Registration

Thank you for purchasing an Omcan product. To register your warranty for this product, complete the information below, tear off the card at the perforation and then send to the address specified below. You can also register online by visiting:

Merci d'avoir acheté un produit Omcan. Pour enregistrer votre garantie pour ce produit, complétez les informations ci-dessous, détachez la carte au niveau de la perforation, puis envoyez-la à l'adresse spécifiée ci-dessous. Vous pouvez également vous inscrire en ligne en visitant :

Gracias por comprar un producto Omcan. Para registrar su garantía para este producto, complete la información a continuación, corte la tarjeta en la perforación y luego envíela a la dirección indicada a continuación. También puede registrarse en línea en:

https://omcan.com/warranty-registration/

For mailing in Canada · Pour envoi postal au Canada · Por correo en Canadá

OMCAN
PRODUCT WARRANTY REGISTRATION
3115 Pepper Mill Court,
Mississauga, Ontario
Canada, L5L 4X5

For mailing in the US · Pour envoi postal aux États-Unis · Por correo en los EE.UU.

OMCAN
PRODUCT WARRANTY REGISTRATION
4450 Witmer Industrial Estates, Unit 4,
Niagara Falls, New York
USA, 14305

or email to: service@omcan.com

✂ - - -

Since 1951 Omcan has grown to become a leading distributor of equipment and supplies to the North American food service industry. Our success over these many years can be attributed to our commitment to strengthen and develop new and existing relationships with our valued customers and manufacturers. Today with partners in North America, Europe, Asia and South America, we continually work to improve and grow the company. We strive to offer customers exceptional value through our qualified local sales and service representatives who provide convenient access to over 6,500 globally sourced products.

Depuis 1951 Omcan a grandi pour devenir un des « leaders » de la distribution des équipements et matériel pour l'industrie des services alimentaires en Amérique du Nord. Notre succès au cours de ces nombreuses années peut être attribué à notre engagement à renforcer et à développer de nouvelles et existantes relations avec nos clients et les fabricants de valeur. Aujourd'hui avec des partenaires en Amérique du Nord, Europe, Asie et Amérique du Sud, nous travaillons continuellement à améliorer et développer l'entreprise. Nous nous efforçons d'offrir à nos clients une valeur exceptionnelle grâce à nos ventes locales qualifiées et des représentants de service qui offrent un accès facile à plus de 6500 produits provenant du monde entier.

Desde 1951 Omcan ha crecido hasta convertirse en un líder en la distribución de equipos y suministros para la industria de servicios de alimentos en América del Norte. Nuestro éxito en estos años se puede atribuir a nuestro compromiso de fortalecer y desarrollar relaciones nuevas y existentes con nuestros valiosos clientes y fabricantes. Hoy con socios de América del Norte, Europa, Asia y América del Sur, trabajamos continuamente para mejorar y crecer la empresa. Nos esforzamos por ofrecer a nuestros clientes valor excepcional a través de nuestro local de ventas y representantes de los servicios que proporcionan un fácil acceso a más de 6,500 productos con origen a nivel mundial.

omcan.com